ASSEMBLY

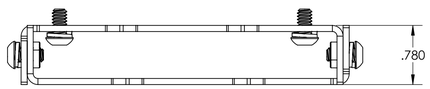

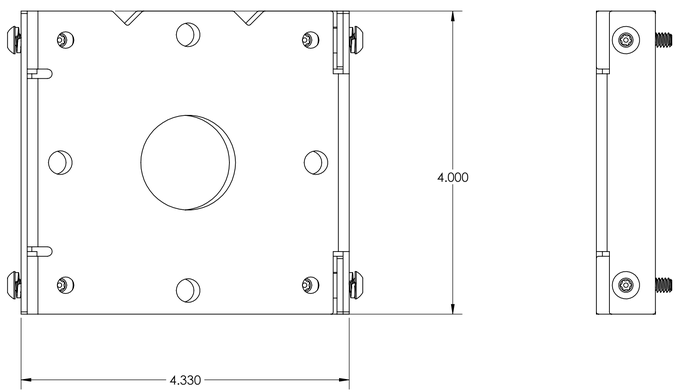

ASSEMBLY

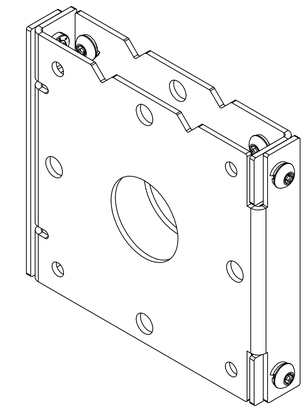

EXPLODED VIEW

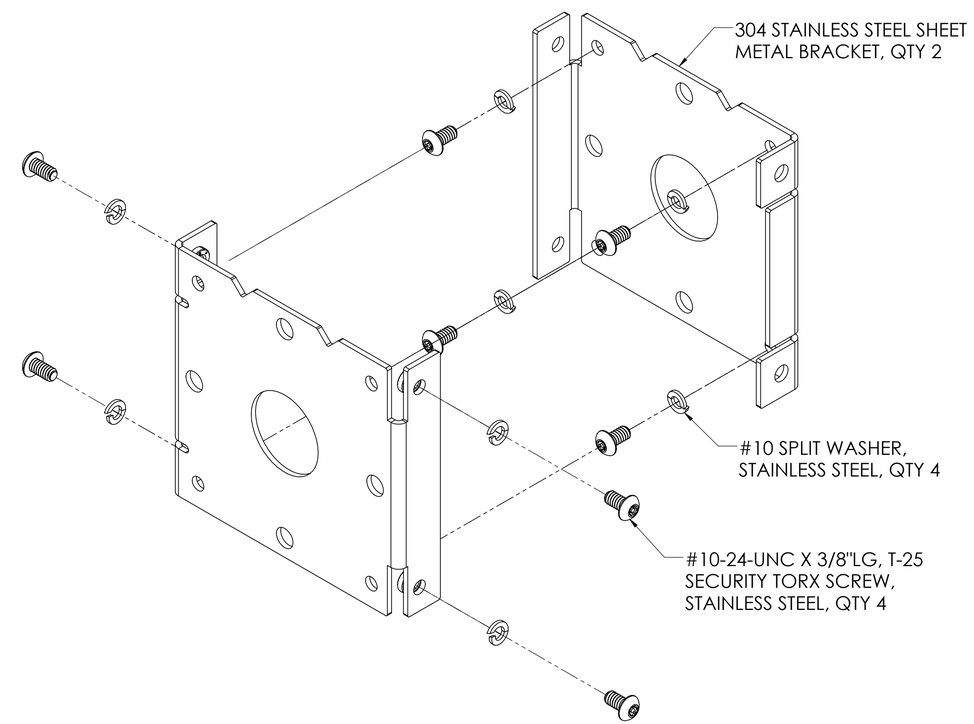

INDIVIDUAL BRACKET

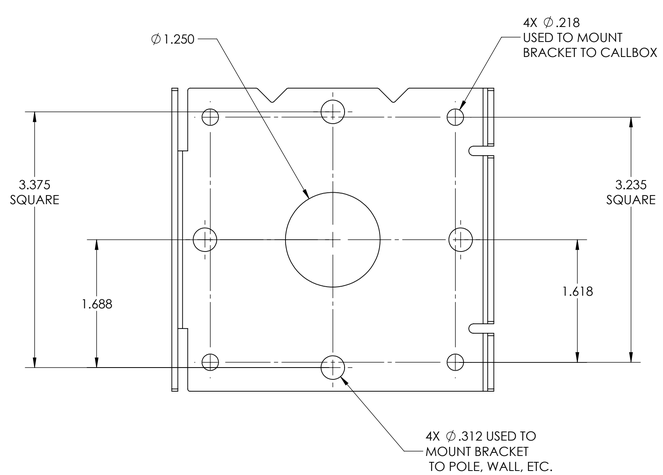

ALL DIMENSIONS FOR REFERENCE ONLY

REV	DESCRIPTION	DATE	ECN NO.
A	RELEASE TO WEBSITE	12/4/24	ATP

TOLERANCES UNLESS OTHERWISE SPECIFIED
INCH TOLERANCES
.XX = ± .03
.XXX = ± .005
ANGLES = ± 0° 30'
DEBURR HOLES AND SHARP EDGES
GEOMETRIC DIMENSIONING & TOLERANCING PER ASME Y14.5M

- NOTICE -
This technical drawing is the property of Ritron and embodies a confidential proprietary design in which Ritron retains all patents, patents pending and other rights, including exclusive right of use, manufacture and sale. It is submitted under a CONFIDENTIAL relationship for a specific purpose and the recipient agrees, by accepting this drawing, not to supply or disclose any information regarding it to any unauthorized person. Nor may any portion of it be copied, exhibited or furnished to others, nor may photographs be taken of any article fabricated or assembled from this drawing without the consent of Ritron. This drawing must be returned on request.

- MATERIAL -	HARDNESS	DRAWN BY	DATE	SCALE	SHEET 1 OF 1
STAINLESS STEEL	PART NAME / TITLE: RQX-Q-GN GOOSENECK MOUNT				DRAWING UNITS: INCH
					THIRD ANGLE PROJECTION
	USED ON: MODEL Q SERIES CALLBOXES				STATUS: PRODUCTION
					SIZE: D
DO NOT SCALE DRAWING	RITRON	DRAWING NO.: RQX-Q-GN DIMENSIONS			REV.: A
		A.PECK	12/6/2024	1:1	